JUMO GmbH & Co. KG
Delivery address: Mackenrodtstraße 14, 36039 Fulda, Germany
Postal address: 36035 Fulda, Germany
Phone: +49 661 6003-0
Fax: +49 661 6003-607
e-mail: mail@jumo.net
Internet: www.jumo.net

JUMO Instrument Co. Ltd.
JUMO House
Temple Bank, Riverway
Harlow, Essex CM 20 2TT, UK
Phone: +44 1279 635533
Fax: +44 1279 635262
e-mail: sales@jumo.co.uk
Internet: www.jumo.co.uk

JUMO Process Control, Inc.
8 Technology Boulevard
Canastota, NY 13032, USA
Phone: 315-697-JUMO
1-800-554-JUMO
Fax: 315-697-5867
e-mail: info@jumo.us
Internet: www.jumo.us

JUMO dTRANS p02 DELTA
Pressure transmitter

Type 404382

Ex II 1/2G EEx ia IIC T4-T6

General application

The JUMO dTRANS p02 DELTA pressure transmitter measures the differential pressure in both corrosive and non-corrosive gases, vapors and liquids. The pressure transmitter makes use of the piezo-resistive effect to make the measurement. The output signal is a DC current which is linearly proportional to the input pressure. With flow-through measurements, it is possible to set up the output signal to be proportional to the square-root of the input pressure.
In the version “with **Ex** protection Ex II 1/2G EEx ia IIC T4-T6“, the transmitter can be mounted within the hazarduos area Zone 1, for connection to Zone 0.
A wide spectrum of pressure separators is available for special applications such as level measurements, or for corrosive media.

Display options:
- pressure with choice of 13 different units, measurement in % or scaled with freely selectable dimensional unit, output current in mA
- sensor temperature in •C or °F
- measurement error, out-of-range measurement
- minimum and maximum pressures (peak-reading pointer)
- pressure and sensor temperature can be shown simultaneously (2 lines)

Setting options via keys:
- start and end of measurement with pressure input
- start and end of measurement without pressure input (blind setting)
- damping or time constant
- current generator function
- output signal on error
- key inhibit
- reset min. and max. measured value (peak-reading pointer)
- square-root characteristic (adjustable starting point), or linear
- density correction for different measurement media
- display of temperature of medium in °C or °F

The JUMO dTRANS p02 DELTA pressure transmitter can also be used with a HART® communicator or a PC in conjunction with a HART® modem and the JUMO setup program running under Windows®.

Accessories

Setup program
Sales No. 40/00365072.
The setup program for all instruments of the JUMO dTRANS p02 series has been created according to the VDI/VDE 2187-user interface. Together with the HART® modem, the program enables easy operation and parameter setting of the pressure transmitter from a PC.

HART® modem
Sales No. 40/00345666
The HART® modem provides the link between the JUMO dTRANS p02 transmitter and the serial interface of a PC.

Bracket for wall and pipe mounting
Sales No. 40/00314729

Triple valve block
Sales No. 40/00308191
to DIN 19 213, stainless steel
other valve types on request.

Oval flange 1/2" NPT
Sales No. 40/00398914
to DIN 19 213, stainless steel.
Set of 2, with M10 screws.
Other flange types on request.

Supply isolator for Ex applications, HART® capable
Sales No. 40/00389710,
see Data Sheet 40.4757

Pressure separators
for adaptation to special applications, whenever conventional pressure connection cannot be used.
See Data Sheets 40.9770 to 40.9786

Technical data

Explosion protection
(only with basic type extension 1)

Ex II 1/2G EEx ia IIC T4-T6
PTB 98 ATEX 2194
The supply must be intrinsically safe and must not exceed the following maximum values:
Ui = 30V DC
Ii = 100mA
Pi = 750mW

Reference conditions
as per DIN 16 086 and IEC 770/5.3

Nominal input range
see Order details

Range setting
The measurement range can be set from the transmitter keys, by using the setup program or a HART® communicator as described below:
Start and end of the measurement range can be continuously adjusted within the nominal range.
The span should not go below 10% of the nominal range.

Displayable units
mH_2O, inH_2O, inHg, ftH_2O, mmH_2O, mm Hg, psi, bar, mbar, kg/cm², kPa, Torr, MPa;
Measurement:
% or scaled with freely adjustable unit
Output current:
mA

Additional displays
indication of sensor temperature, minimum pressure, maximum pressure.
Indication on overrange and on error.

Density correction
adjustable within the range from 0.100 to 5.000 kg/dm³

Nominal pressure
PN 160
option: PN 420

Parts in contact with medium
as standard:
stainless steel, Mat. Ref. 1.4401, 1.4404
flanges: stainless steel, Mat. Ref. 1.4408
O ring: FPM
option: see Order details

Pressure connection
see Order details

Output
4 — 20 mA burden ≤ (U_B-11.5 V) / 0.022 A
burden with HART® max. 1100 Ω, min. 250 Ω
with HART® protocol V 5.3.
Complies with the Directives of the HCF (HART® Communication Foundation)

Characteristic
linear or square-root. Adjustable starting point with square-root characteristic (ex-factory is linear up to 9.4%).

Burden error
< 0.1%

Zero offset / adjustment accuracy
≤ 0.01 mA

Effect of static pressure
zero: ≤ 0.015%/10 bar
span: ≤ 0.020%/10 bar

Ambient temperature error
within range -20 to +85°C
(compensated temperature range)
zero: ≤ 0.005% per °C typical,
≤ 0.01% per °C max.
span: ≤ 0.005% per °C typical,
≤ 0.01% per °C max.

Deviation from characteristic
limit point adjustment:
≤ 0.1% of full scale of nominal range;
as per DIN 16 086

Hysteresis
≤ 0.02% of full scale; as per DIN 16 086

Reproducibility
≤ 0.02% of full scale; as per DIN 16 086

Response time
150 msec approx., no damping

Damping
adjustable from 0 — 100 sec

Stability per year
≤ 0.1% of full scale (for nominal range at reference conditions as per IEC 770)

Supply
11.5 — 36V DC
11.5 — 30V DC (for intrinsically safe version)
Supply unit for output signal transmission with or without HART® communication, in intrinsically safe version, see Data Sheet 40.4757.
Note:
Minimum 17V DC (250Ω) for communication via HART® protocol.

Supply voltage error
≤ 0.1% of full scale per 10 V change
(nominal supply voltage 24 V DC)

Permissible ambient temperature
-40 to +85°C; as per DIN 16 086
(the LCD display may not be readable at temperatures below -20°C)
With version EX II 1/2G EEX ia IIC T4-T6: +60°C

Storage temperature
-40 to +85°C

Permissible temperature of medium
-40 to +100°C
(with halogenized filling oil -10 to +100•C)

Electromagnetic compatibility (EMC)
as per EN 61 326

Mechanical shock
50g/11msec

Mechanical vibration
5g max. at 10 — 2000Hz

Protection
with connecting cable
IP65 to EN 60 529

Insulation resistance
100 MΩ; 50 V DC

Breakdown strength
≥ 500 $V_{eff.}$

Housing
aluminium die-casting GDAlSi12

Flange screws
steel, yellow-chromed
option: stainless steel

Climatic conditions
≤ 80% rel. humidity with condensation, annual mean

Electrical connection
clamping case with screw cover, 2-pole and earthing terminal, plastic cable gland M20 x 1.5 for cable diameters 6 to 12 mm

Nominal position
ex-factory: upright vertical
(pressure cell below)
any operating position

Weight
3.9 kg approx.

HART® communication

between PC and pressure transmitter

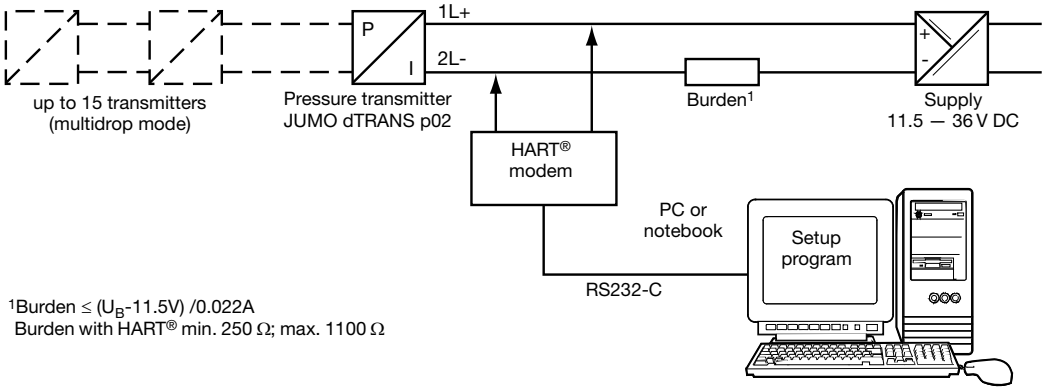

[1]Burden ≤ (U_B-11.5V) /0.022A
Burden with HART® min. 250 Ω; max. 1100 Ω

between HART® communicator and pressure transmitter

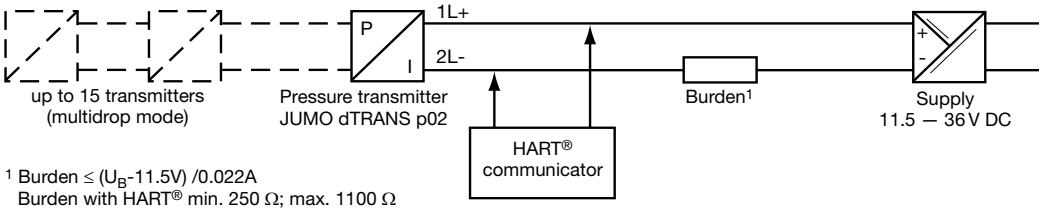

[1] Burden ≤ (U_B-11.5V) /0.022A
Burden with HART® min. 250 Ω; max. 1100 Ω

Dimensions

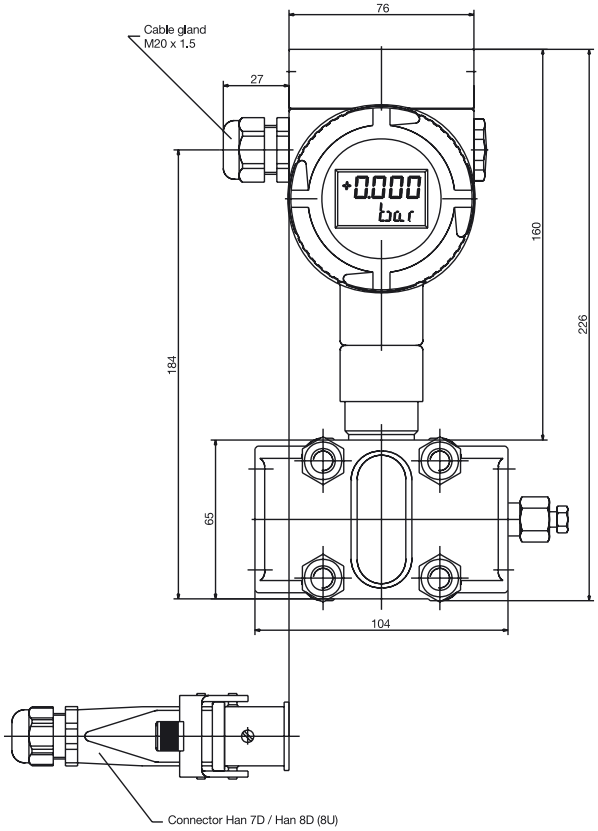

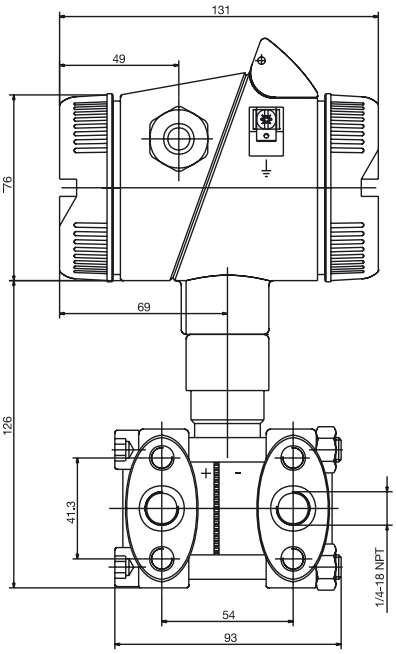

Electrical connection

Connection		Terminals	
Supply 11.5 — 36 V DC	+ -	1 L+ 2 L-	
Output 4 — 20 mA 2-wire	+ -	1 L+ 2 L-	proportional current 4 — 20 mA in supply
Test connection for current output	internal resistance of ammeter ≤ 10 Ω	TEST + TEST -	
Test connection for HART®	burden must be present!	TEST + HART®	
Potential equilibration (for intrinsically safe circuit)			
Shielding			

Caution:
Earth instrument!
(pressure connection and shielding)

Terminal assignment

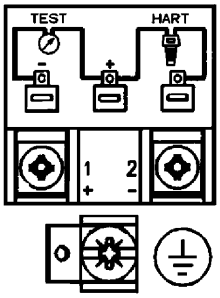

Order details

Basic type
404382 pressure transmitter dTRANS p02 DELTA

Basic type extension
0 none
1 with **Ex** protection Ex II 1/2G EEx ia IIC T4-T6
5 increased nominal pressure PN 420

Nominal input range
413 60 mbar differential pressure
451 250 mbar differential pressure
454 1 bar differential pressure
457 4 bar differential pressure
461 25 bar differential pressure

Output
405 4 — 20 mA with HART® protocol

Process connection
511 2 x pressure connection 1/4-18 NPT, DIN 837
998 suitable for connection to diaphragm-type pressure separators

Material for process connection
20 stainless steel, Mat. Ref. 1.4401, 1.4404, flange Mat. Ref. 1.4408
82 special chrome-nickel alloy C276 + Mat. Ref. 2.4819, flange Mat. Ref. 1.4408
83 Monel, Mat. Ref. 2.4360, flange stainless steel Mat. Ref. 1.4408

Fastening thread
113 M10[1](standard)
117 M12 (PN 420)
152 7/16-20 UNF

Seals
601 FPM
603 PTFE (suitable for comestibles)
604 FFPM

Meas. system filling medium
1 silicone oil
2 halogenized filling oil for oxygen applications

Flange screws
2 stainless steel

404382 / [ ] - [ ] - 405 - [ ] - [ ] - [ ] - [ ] - [ ] - [ ] **Order code**

Factory setting:
Please specify the measurement range to be set and the dimensional unit in plain text.
[1] not for “increased nominal pressure PN420” (404382/5-....)